ICEMATIC

CHERRY

C54

54 kg/ 24h

Spray Ice Makers / Spray Ice Makers:
C28 - C38 - C46 - C54 - C70 - C90

C54 ALL GAS PUMP
220-240/50/1
Spray Ice Makers

RAINBOW TECHNOLOGY | PROGRAMMED OZONE CYCLE | SCHEDULED PRODUCTION | TOUCH CONTROL | SAFE ICE | USB | BLUETOOTH | PUMP

FEATURES

- Steel shell
- Air condensation
- Sanitization cycle
- Programmable ice production
- Capacitive control key
- Audible and light signaling alarms
- HACCP Alarm Report
- External cube weight adjustment
- USB connection for sw update and HACCP data download
- Condenser fan controlled at low ambient temperatures
- Programmable ice production
- Predictive failure analysis
- Equipment performance report
- Internal drain pump
- Download the operation report via the app

OPTIONAL

- Programmable sanitizing cycle with ozone
- Nanotechnological evaporator treatment with Rainbow Technology
- Feet kit 100mm



RECOMMENDED DEPOSITS

22,0 kg
1100 pcs

DIMENSIONS

L x P x H (mm)

500 x 580 x 800

560 x 640 x 960

VOLTAGE

220-240/50/1
220/60/1

GAS

R290
GWP 3

ICE TYPE

		PCS / CYCLE PZ / CICLO	WEIGHT ICE PESO GHIACCIO
	Full Ice Cube 20 g -54 35 x 37 x 32 mm	36	20 g

ICE PRODUCTION

kg/24h
lbs/24h

Air cooling

Temp. Aria Air Temp.	Temp. Acqua /Water Temp.			
°C / °F	10° 50°	15° 59°	21° 70°	32° 90°
10° 50°	54 119	53 117	49 108	42 93
21° 70°	46 101	45 99	41 90	35 77
32° 90°	43 95	42 93	38 84	32 71
38° 100°	39 86	38 84	34 75	28 62

TECHNICAL DATA

			cond	comp. W	ABS. W	Fuse	Kwh/100Kg	l / h	Kg	Kg
C54	A AG	220-240/50/1N		1167	520	10	23.3	4.5	42	50
C54	W AG	220-240/50/1N		1167	440	10	20.6	43.4	42	50

Via del Lavoro, 9 31033 Castelfranco Veneto (TV) Tel.
+39 0423.738452 Fax +39 0423.722811
email: info@castelmac.it
www.castelmac.eu - www.icematic.eu

ICEMATIC

CHERRY

C54

54 kg/ 24h

Spray Ice Makers / Spray Ice Makers:
C28 - C38 - C46 - C54 - C70 - C90

C54 ALL GAS PUMP
220-240/50/1
Spray Ice Makers

DIMENSIONS

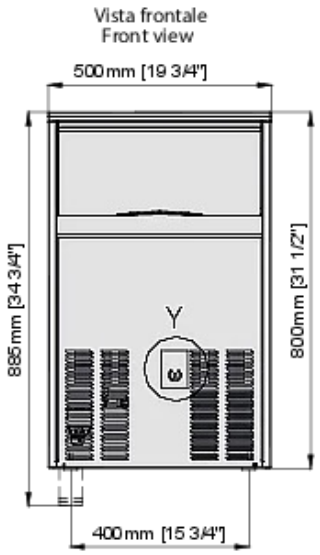

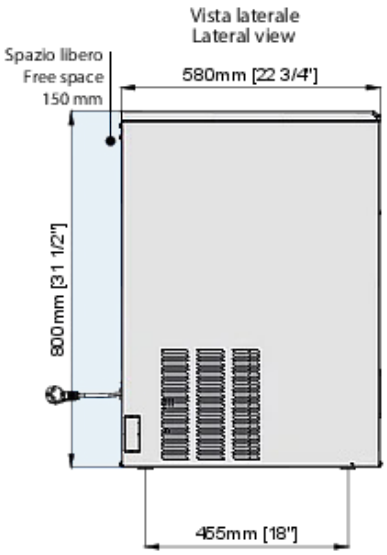

B Water outlet connection Ø24
Attacco scarico acqua Ø24

C Electrical cable supply
Ingresso alimentazione elettrica

D Water inlet connection / Attacco entrata acqua - 3/4"G

E Water outlet connection water condensation 3/4G / Uscita acqua condensatore ad acqua 3/4G



Schuko plug
Spina schuko



Kit 4 Feet
Kit 4 piedini
Ø50mm H100-120 mm
(Opzionali-optional)

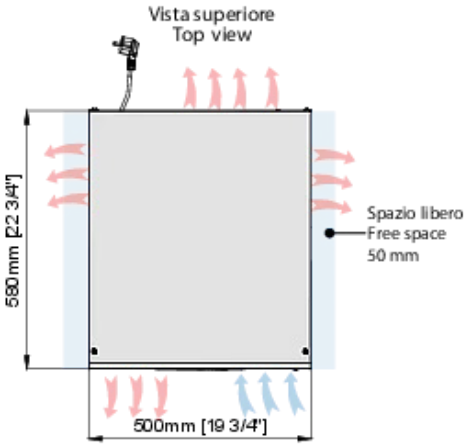

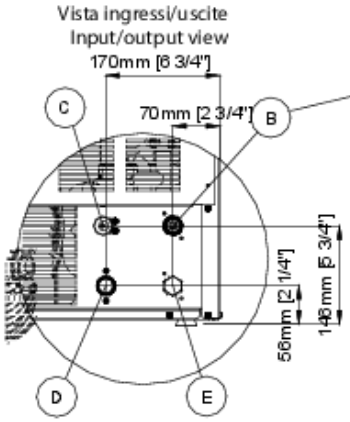



Altezza scarico pompa massimo **1,5 m.**
Drain pump maximum height **1.5 m.**

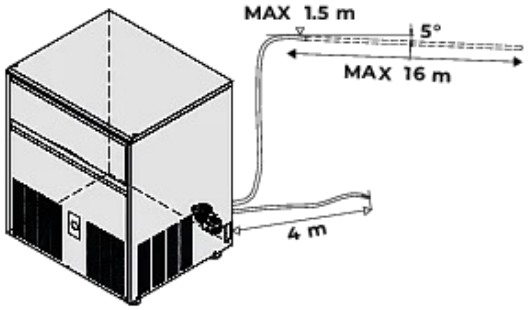

MyICE

Allows control and monitoring of ice makers directly from smartphones / Allows control and monitoring of ice makers directly from smartphones

Available on the Google Play

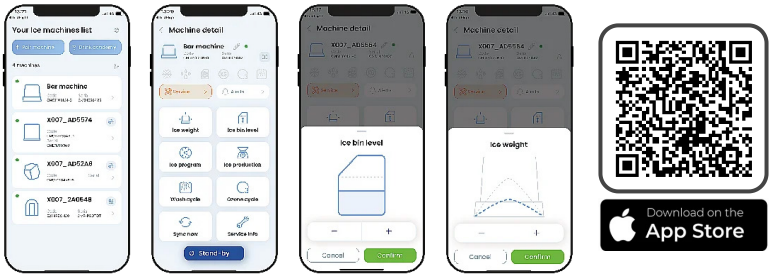

Download on the App Store

TOUCH CONTROL

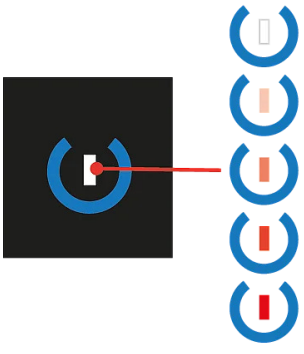

Capacitive Stand-by / Start button
(LED continuously changing colors from white to red)

Operating conditions

	Min	Max
Temp. Ambient	10°C	40°C
Temp. Water Ice	5°	35°
Water Pressure	1 Bar (14psi)	10 Bar (140psi)
Conductivity water	20 microS	500 microS
Power Supply	-10%	+10%

Heat expelled	1707 W
Air Volume	310 m³/h

Via del Lavoro, 9 31033 Castelfranco Veneto (TV) Tel. +39 0423.738452 Fax +39 0423.722811
email: info@castelmac.it
www.castelmac.eu - www.icematic.eu